DAH Solar

TRIFAZNI HIBRIDNI INVERTER

DHN-LVEH3P12K-EU-G1

Slovenska navodila za uporabo, namestitev in nastavitev



Različica dokumenta: SI 1.0 / julij 2026

Pomembno: Ta dokument je slovenski prevod in uporabniška priredba proizvajalčevih navodil, namenjena lažji uporabi izdelka. Ne nadomešča originalne tehnične dokumentacije, certifikatov, lokalnih predpisov ali navodil pooblaščenega električarja. Pri neskladju velja originalni dokument proizvajalca.

Kazalo

1. 1. Namen dokumenta in varnost
2. 2. Predstavitev izdelka
3. 3. Tehnični podatki
4. 4. Vsebina paketa
5. 5. Zahteve za namestitev
6. 6. Mehanska namestitev
7. 7. Električne povezave
8. 8. PV-priklop
9. 9. Baterijski priklop
10. 10. Omrežje, rezervni izhod in generator
11. 11. CT-senzorji, merilnik in komunikacija
12. 12. Zagon in zaustavitev
13. 13. Zaslon in osnovna uporaba
14. 14. Načini delovanja
15. 15. Nastavitve generatorja in AC coupling
16. 16. Nastavitve omrežja
17. 17. Nastavitve baterije
18. 18. Vzporedna vezava
19. 19. Odpravljanje napak
20. 20. Vzdrževanje
21. 21. Dodatek: priključki RJ45
22. 22. Podpora in odgovornost

1. Namen dokumenta in varnost

Navodila veljajo za trifazni nizkonapetostni hibridni inverter DAH Solar DHN-LVEH3P12K-EU-G1 in temeljijo na proizvajalčevem priročniku za serijo DHN-LVEH3P8/10/12K-EU-G1. Namenjena so monterjem, serviserjem in uporabnikom, ki želijo razumeti delovanje sistema.

Nevarnost: V inverterju so prisotne nevarne enosmerne in izmenične napetosti. Namestitev, električni priklop, zagon in servis mora izvesti usposobljena oseba.

- Pred delom izklopite PV-stikalo, omrežni odklopnik, rezervni izhod in baterijski odklopnik.
- Po izklopu počakajte najmanj 5 minut, da se notranji kondenzatorji izpraznijo.
- Uporabljajte izolirano orodje in osebno varovalno opremo.
- Ne odpirajte ohišja med delovanjem.
- Ne nameščajte naprave v bližino gorljivih ali eksplozivnih snovi.
- Inverter mora biti pravilno ozemljen.
- Ne priklapljajte PV-stringov z napetostjo nad dovoljeno mejo.
- Baterija mora imeti ustrezno zaščito, pravilno polariteto in dovoljeno napetostno območje.
- Rezervni izhod ni namenjen medicinski opremi ali porabnikom, ki zahtevajo brezhibno neprekinjeno napajanje brez dodatnega UPS-a.

2. Predstavitev izdelka

DHN-LVEH3P12K-EU-G1 je 12 kW trifazni hibridni inverter za 40-60 V baterijske sisteme. Združuje PV-vhod, baterijo, omrežni priključek, rezervni izhod, generator oziroma pametni izhod ter lokalno in oddaljeno spremljanje.

- Dva neodvisna MPPT-sledilnika in trije PV-vhodi v razporeditvi 2 + 1.
- Podpora za litijeve baterije z BMS-komunikacijo in ustrezno nastavljene svinčene baterije.

- Največji tok polnjenja in praznjenja baterije do 240 A.
- Ločen rezervni izhod za izbrane porabnike.
- Podpora za generator, AC coupling in pametni izhod.
- Funkcije ničelnega izvoza, časovne tarife, prednost porabnikov ali baterije ter zmanjševanje konic.
- Možnost vzporednega delovanja do 10 enot.
- Barvni LCD-zaslon in podatkovni ključ za nadzor.

2.4 Interface Definition

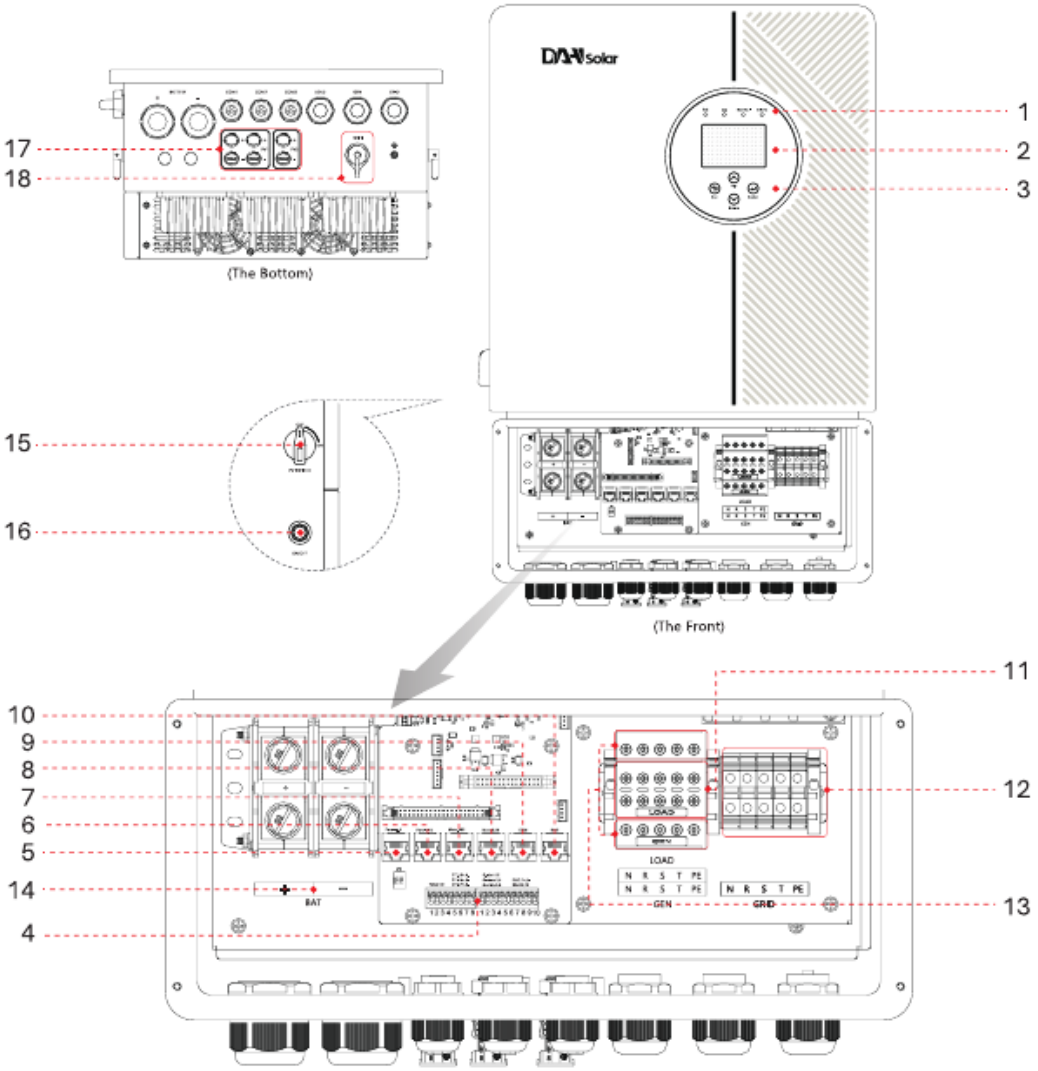

Serial number	Interface Name	Serial number	Interface Name
1	Indicator light	10	BMS port
2	LCD display	11	Load
3	Function buttons	12	Grid
4	Function port	13	Generator input
5	Parallel port A	14	Battery input connectors
6	Parallel port B	15	PV switch
7	Meter-485 port	16	ON/OFF
8	Modbus port	17	PV Input with two MPPT
9	DRM port	18	WiFi Interface

Prikaz osnovnih priključkov in uporabniškega vmesnika (iz originalnega priročnika).

3. Tehnični podatki

Podatek	Vrednost
Model	DHN-LVEH3P12K-EU-G1
Nazivna AC moč	12.000 W
Največja navidezna moč	13.200 VA
Omrežje	Trifazno, 3L + N + PE
Največja priporočena moč PV-polja	19.200 Wp
Največja PV-napetost	800 V DC
Zagonska PV-napetost	150 V DC
MPPT-območje	200-650 V DC
Število MPPT	2
PV-stringi	3 (2 + 1)
Največji delovni PV-tok	26 A + 16 A
Največji kratkostični PV-tok	34 A + 20 A
Baterijska napetost	40-60 V DC
Največji polnilni tok	240 A
Največji praznilni tok	240 A
Največji izkoristek	približno 97,6 %
Komunikacija	CAN, RS485, Modbus, podatkovni ključ
Stopnja zaščite	IP65
Delovna temperatura	-40 do +60 °C
Mere	450 x 677 x 255 mm
Masa	približno 36,2 kg
Hlajenje	Inteligentno prisilno zračno hlajenje
Osnovna garancija proizvajalca	5 let, skladno z garancijskimi pogoji dobavitelja

4. Vsebina paketa

Element	Količina
Hibridni inverter DHN-LVEH3P12K-EU-G1	1
Stenski nosilec 418 x 362 x 50 mm	1
Komunikacijski kabel, 2 m, dvojni RJ45	1
Temperaturno tipalo baterije MT103F3950P/3B3000	1
Tokovni transformator CTK160402-100A/50mA	3
Feritni obroč 80 x 50 x 20 mm	1
Pozitivni PV-konektor	3
Negativni PV-konektor	3
Orodje za PV-konektorje	1
Raztezni vijak M8 x 80 mm	4
Kombinirani vijak M5 x 12 mm	4
Ključ T25	1
Pakirni seznam	1
Originalni uporabniški priročnik	1
Podatkovni ključ LSW-5B3153	1

5. Zahteve za namestitev

- Namestitev je dovoljena v notranjih ali zunanjih prostorih, vendar mora biti naprava zaščitena pred neposrednim dežjem, poplavljanjem in dolgotrajnim neposrednim soncem.
- Podlaga mora biti negorljiva, ravna in dovolj nosilna.
- Prostor mora biti dobro prezračevan.
- Naprava naj bo nameščena navpično; dovoljeno je le manjše odstopanje nazaj.
- Ne nameščajte je vodoravno, obrnjeno ali močno nagnjeno.

- Okoli naprave pustite najmanj 500 mm prostora zgoraj, spodaj in ob straneh; pred napravo najmanj 1000 mm.
- Pri več inverterjih naj bo med sosednjima napravama najmanj 500 mm.
- Izberite višino, na kateri je zaslon viden in so priključki dostopni.

3.3 Installation Requirements

3.3.1 Installation Environment Requirements

• Installation Environment: The inverter can be installed both indoors and outdoors.
• Heat Precautions: During operation, the inverter chassis and heat sink may become hot. Avoid installing the inverter in easily accessible areas.
• Avoid Hazardous Areas: Do not install the inverter in locations containing flammable or explosive materials.
• Safe Installation Location: Choose an installation site that is free from concealed pipes or wiring to avoid potential hazards during drilling.
• Ventilation: Ensure the inverter is installed in a well-ventilated area to allow for adequate heat dissipation.
• Shading and Protection: It is recommended to select a shaded location or build a sun shelter to protect the inverter from direct sunlight.
• Grounding: The installation site must provide reliable grounding, using grounding conductors made from the same metal material as the inverter's grounding terminal.
• Electromagnetic Interference: Keep the inverter away from strong magnetic fields to prevent electromagnetic interference. If the installation site is near radio stations or wireless communication devices operating below 30 MHz, follow these guidelines:

1. Add ferrite cores with multiple turns to the DC input or AC output cables
2. Install a low-pass EMI filter
3. Maintain a minimum distance of 30 meters between the inverter and any interfering wireless equipment



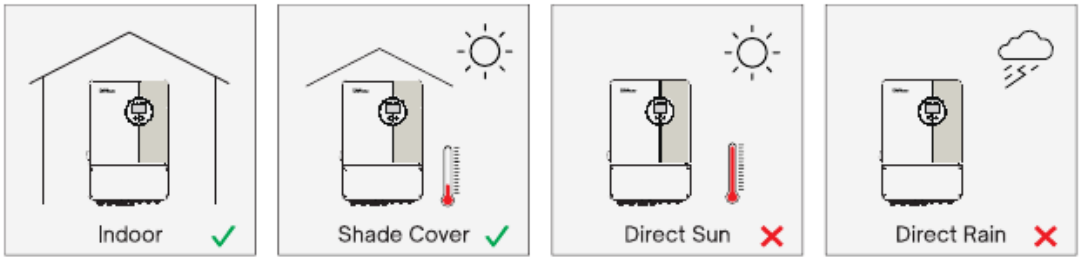

3.3.2 Installation Space Requirements

• Mounting Height: Ensure the mounting height allows the LCD display to be at eye level for easy status monitoring.
• Clearance for Maintenance: The installation location must provide sufficient clearance around the inverter to allow for easy maintenance access and proper air circulation.
• Installation Angle: The installation surface should be perpendicular to the ground. Install the inverter vertically or with a backward tilt of ≤ 15 ° to facilitate optimal heat dissipation. Do not install the inverter with a forward tilt, horizontally, upside-down, excessive backward tilt, or sideways.

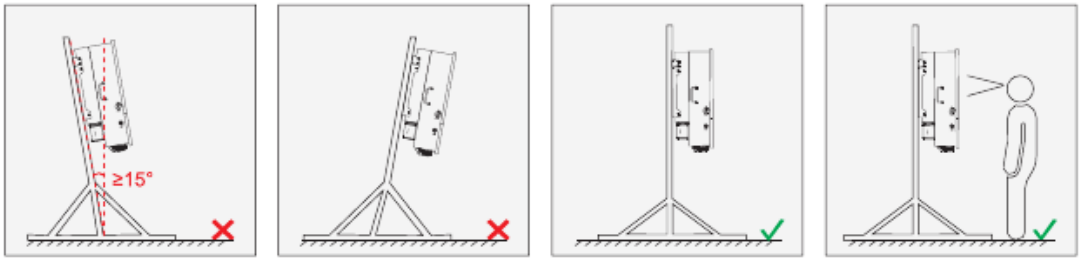

Priporočeno in neprimerno okolje namestitve.

• Spacing Between Inverters: When installing multiple inverters, maintain a minimum spacing of 500 mm between each unit. Ensure adequate clearance above and below the inverters to allow for effective heat dissipation.

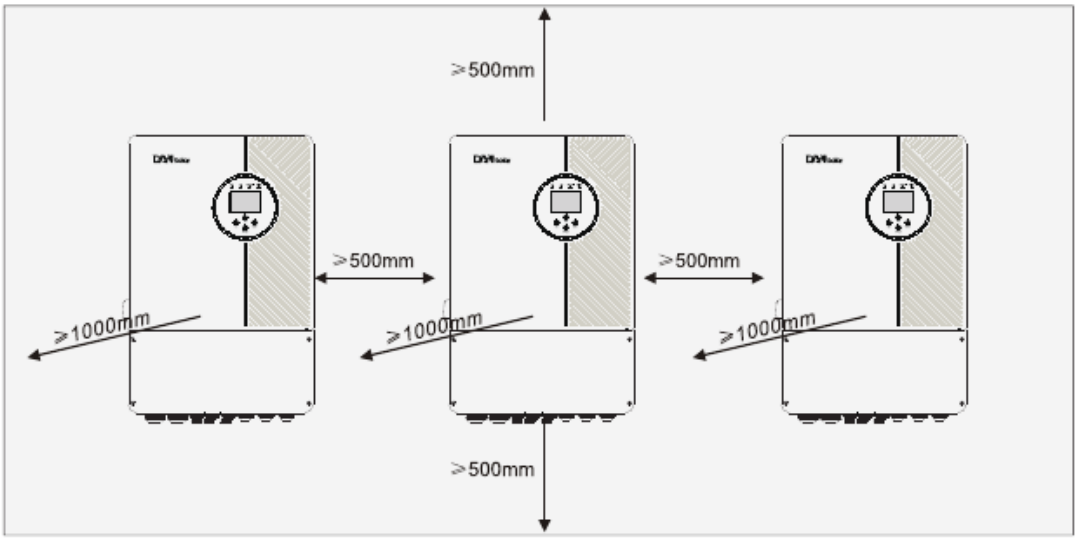

3.3.3 Requirements for Installation Carrier

• Fire Resistance: The installation surface must be made of non-flammable, fire-resistant materials.
• Structural Stability: Ensure the installation surface is robust and capable of securely supporting the weight of the inverter and associated equipment.

3.4 Hybrid Inverter Installation

Before installation, the equipment must be transported to the installation site. To prevent personal injury and equipment damage during transportation, please follow these guidelines:
1. Proper Handling: Assign an adequate number of personnel based on the weight of the equipment to prevent overloading and reduce the risk of injury.
2. Wear Protective Gear: Always wear safety gloves to protect your hands from injury during transportation.
3. Maintain Balance: Ensure the equipment is kept balanced throughout the transportation process to prevent it from tipping or falling.
4. Qualified Personnel: Installation should only be performed by trained professionals with adequate knowledge of power systems. During installation, ensure compliance with all relevant safety regulations and local safety standards.

3.4.1 Installation Steps

I. Position the wall-mounted bracket horizontally on the wall surface. Ensure the wall thickness is greater than 60 mm. Use a marking pen to accurately mark the positions of the four mounting holes to be drilled.

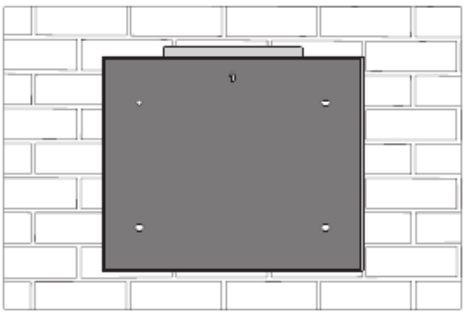

Minimalni odmiki okoli inverterja.

6. Mehanska namestitev

23. Stenski nosilec poravnajte vodoravno in označite štiri pritrdilne točke.
24. Izvrtajte luknje premera približno 12 mm in globine najmanj 60 mm.
25. Vstavite raztezne vijake M8 in trdno pritrdite nosilec.
26. Inverter dvignite z ustrezno pomočjo; masa naprave je približno 36 kg.
27. Zgornji rob naprave nasadite na nosilec in preverite pravilno prileganje.
28. Napravo zavarujte z vijaki, da je ni mogoče nenamerno sneti.
29. Pred priklopom preverite mehansko stabilnost.

7. Električne povezave

Vse električne povezave izvedite v breznapetostnem stanju in skladno z lokalnimi predpisi.

Povezava	**Priporočilo proizvajalca za 12 kW model**
Ozemljitev	Bakren vodnik najmanj 6 mm²; največji navor 3 Nm
Baterija	Približno 70 mm² oziroma 2 x 0 AWG; največji navor 24,5 Nm
Omrežje / LOAD / GEN	Bakren vodnik približno 10 mm²
PV-vodniki	Približno 4 mm², odvisno od dolžine in toka
Baterijska DC-zaščita	Približno 300 A, pravilno dimenzionirana glede na sistem
AC-odklopnik	Približno 63 A za 12 kW model; končno izbiro določi projektant/monter

Opozorilo: Vrednosti so povzete iz proizvajalčevih navodil. Dejansko dimenzioniranje kablov, zaščit, RCD in odklopnikov mora upoštevati dolžino vodov, način polaganja, temperaturo, kratkostične tokove in veljavne predpise.

8. PV-priklop

- Največja napetost odprtega kroga PV-polja ne sme preseči 800 V DC.
- Delovno območje MPPT je 200-650 V DC; zagonska napetost je približno 150 V.
- Preverite polariteto vsakega stringa pred priklopom.
- PV+ in PV- nikoli ne zamenjajte.
- Uporabite priložene oziroma proizvajalčevo odobrene konektorje istega tipa.
- Pred priklopom naj bosta omrežni odklopnik in PV-stikalo izključena.
- Za PV-polje uporabite namensko DC-zaščito in odklop.

4. Then, connect the AC output terminals to the corresponding interfaces in the power distribution cabinet, and tighten the terminals. Make sure to also connect the corresponding neutral wire and ground wire to the relevant terminals. (Before making the wiring connections, ensure that the AC power supply has been disconnected.)
5. Tighten the cable fixing head.

Note: Appliances such as air conditioners require at least 2–3 minutes before restarting, to allow sufficient time for the refrigerant gas to stabilize within the system. If a power outage occurs and power is restored too quickly, it can damage connected appliances.
To prevent this, check with the air conditioner manufacturer to confirm whether the unit includes a built-in time-delay function before installation. If not, the inverter may trigger an overload fault and shut off the output to protect the appliance—but internal damage to the air conditioner may still occur.

3.5.6 PV Connection

Before connecting the inverter to the PV modules, install a dedicated DC circuit breaker between them. This step is crucial to ensure system safety and optimal performance.
Furthermore, it is essential to use appropriate cables for the PV module connections. To reduce the risk of injury and prevent system malfunctions, always use the recommended cable size specified below.

Model	Wire Size	Cable(mm^2)
DHN-LVEH3P8/10/12K-G1	12AWG	$4mm^2$

Note: To prevent malfunctions, do not connect any PV modules that may have current leakage to the inverter. For example, grounded PV modules can cause leakage current and damage the inverter. When connecting PV modules, ensure that the PV+ and PV- terminals of the solar panel are not connected to the system ground bar.

3.5.6.1 PV Module Selection

When selecting appropriate PV modules, please consider the following parameters:
• The open-circuit voltage (Voc) of the PV modules must not exceed the inverter's maximum PV array open-circuit voltage (800V).
• The open-circuit voltage (Voc) should be higher than the inverter's minimum start-up voltage (150V).
• The PV modules connected to this inverter must be Class A certified in accordance with IEC 61730 standards.

	DHN-LVEH3P8K-G1	DHN-LVEH3P10K-G1	DHN-LVEH3P12K-G1
PV Input Voltage	550V (150V-800V)		
PV Array MPPT Voltage Range	200V-650V		
No. of MPP Trackers	2		
No. of Strings per MPP Tracker	1+1	2+1	2+1

3.5.6.2 PV Module Wire Connection

• Turn OFF the Grid Supply Main Switch (AC).
• Turn OFF the DC Isolator.
• Connect the PV input connector to the inverter.

Note:
1. When connecting the PV modules, ensure that PV+ and PV- are not connected to the system grounding busbar.
2. Before connecting the inverter, measure the open-circuit voltage (Voc) of the PV modules and confirm that it does not exceed the inverter's maximum allowable input voltage.
3. Before connecting the PV modules, ensure that the polarity of their output voltage is consistent with the markings of the inverter input terminals.
4. Connect the PV+ of the PV module to the PV+ terminal of the inverter.
5. Connect the PV- of the PV module to the PV- terminal of the inverter.
6. Please use certified DC cables for the PV system.

Izbira PV-modulov in osnovne meje PV-vhoda.

Note:
1. Warning: When exposed to sunlight, solar panels generate high voltage, especially when connected in series, which can pose a serious risk of electric shock or life-threatening injury. Before connecting the DC input cables, ensure that the solar panels are covered with opaque material and the DC switch is turned OFF. Failure to do so may expose the inverter to high voltage and create hazardous conditions.
2. Important: Only use the dedicated DC power connectors provided with the inverter. Do not interconnect connectors from different manufacturers.

3.5.6.3 CT Connection

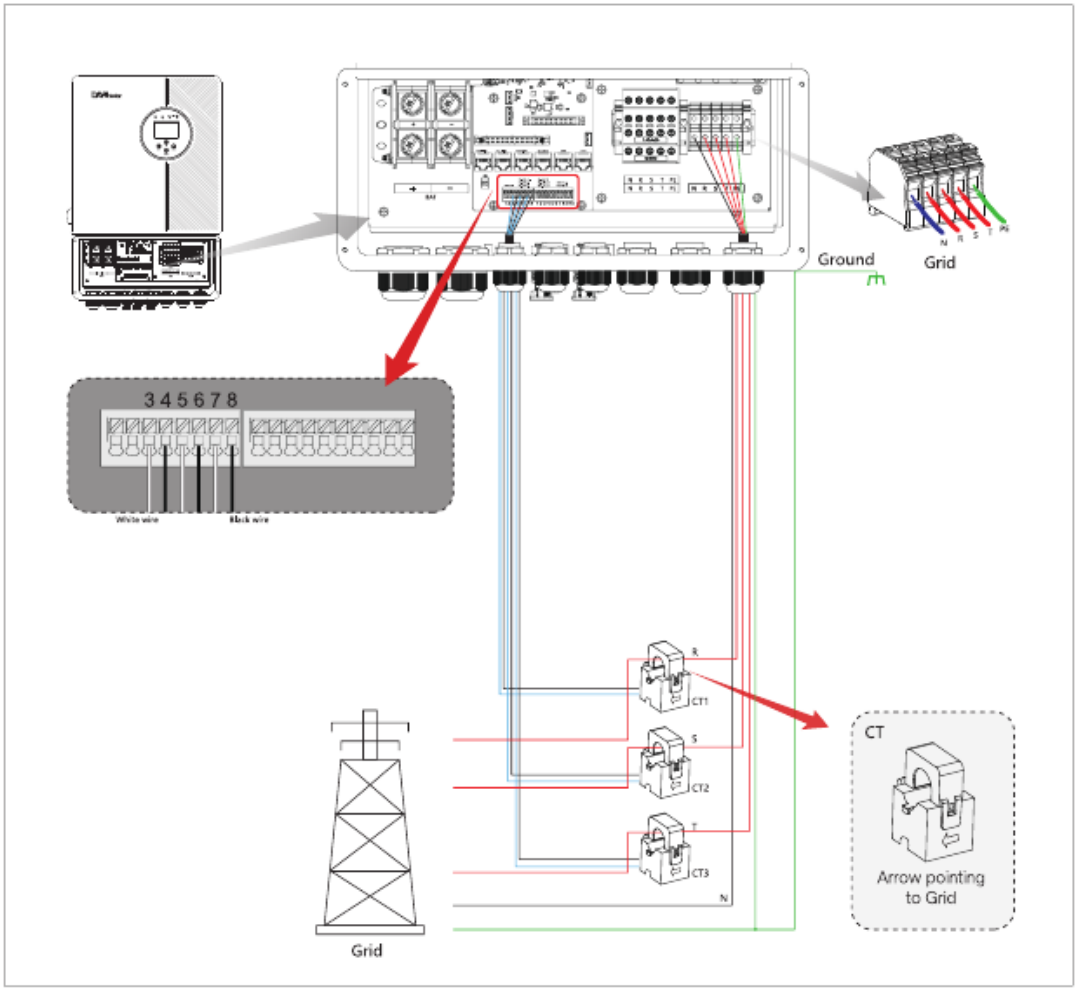

Note:
1. Ensure that the arrow on the CT (Current Transformer) points toward the grid.
2. If the load power reading on the LCD screen appears abnormal, first check whether the CT is installed in the correct direction.

Priklop CT-senzorjev in smer puščice proti omrežju.

9. Baterijski priklop

- Podprto napetostno območje baterije je 40-60 V DC.
- Pred priklopom preverite napetost in polariteto baterije.
- Med baterijo in inverter namestite primeren DC-odklopnik oziroma varovalko.
- Pri litijevi bateriji povežite BMS-komunikacijo CAN ali RS485 skladno s protokolom baterije.
- Pri svinčeni bateriji namestite temperaturno tipalo in nastavite pravilne polnilne napetosti.
- Kabelski čevelj mora biti pravilno stisnjen, izoliran in trdno privit.
- Največji polnilni in praznilni tok nastavite skladno z baterijo, ne le z zmogljivostjo inverterja.

Ground Connection (Copper wires)

Model	Wire Size	Cable(mm²)	Torque value(max)
DHN-LVEH3P8/10K-G1	12AWG	4mm²	3N·m
DHN-LVEH3P12K-G1	10AWG	6mm²	3N·m

Note: The inverter is equipped with a built-in leakage current detection circuit. A Type A RCD can be connected to the inverter for protection in accordance with local laws and regulations. If an external leakage current protection device is used, its operating current must be 300 mA or higher; otherwise, the inverter may not function properly.

3.5.2 Battery Connection

For safe operation and compliance, a separate DC over-current protector or disconnect device is required between the battery and the inverter.In some applications, switching devices may not be required but over-current protectors are still required.
Recommended DC circuit breaker specifications: 250A for 8kW, and 300A for both 10kW and 12kW.
Recommended cable sizes are as follows:

Model	Wire Size	Cable(mm²)	Torque value(max)
DHN-LVEH3P8K-G1	2AWG	35mm²	24.5N·m
DHN-LVEH3P10K-G1	0AWG	50mm²	24.5N·m
DHN-LVEH3P12K-G1	2/0AWG	70mm²	24.5N·m

Follow these steps to properly connect the battery:
I. Loosen the cable fixing heads corresponding to the battery interface on the hybrid inverter and the BMS communication port. Pierce the black sealing rubber at the end of the compression ring on the cable fixing head.
II. Select the appropriate battery-to-inverter connection cable and pass it through the corresponding cable fixing heads for both the battery interface and the inverter.
III. Using a suitable screwdriver, loosen the bolts, connect the cables, and then tighten the bolts securely. Ensure the bolts are tightened clockwise with a torque of 24.5 N·m.
IV. Double-check that the polarity connections at both the battery and inverter ends are correct.
V. After passing the communication cable through the cable fixing head for the BMS communication port, connect the RJ45 connector to the BMS port on the hybrid inverter.
VI. Attach a magnetic ring to the battery-to-inverter connection cable, as shown in the diagram below.
VII. Finally, tighten the cable fixing head to secure the connection.

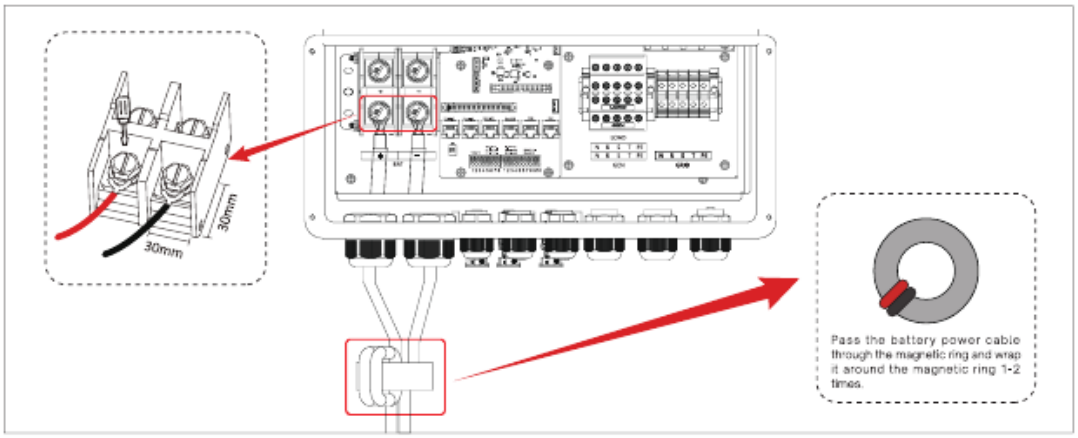

Priporočena povezava baterijskih vodnikov pri 12 kW modelu.

3.5.3 Function port definition

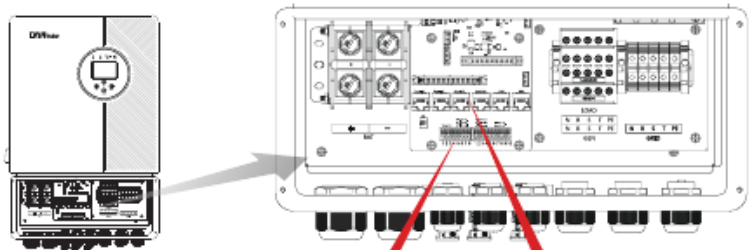

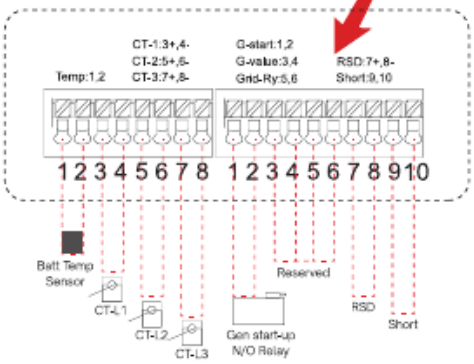



TEMP 1,2: Battery temperature sensor for lead acid battery.
CT-1 3+,4-:Current transformer (CT1) clamps on L1 when in three phase system.
CT-2 5+,6-:Current transformer (CT1) clamps on L2 when in three phase system.
CT-3 7+,8-:Current transformer (CT1) clamps on L3 when in three phase system.

G-start 1,2: Start the dry node of the generator.
When the "GEN signal" is active, the open contact (GS) will switch on (no voltage output).

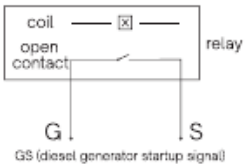

G-valve 3,4: Reserved.
Grid_Ry 5,6: Reserved.
RSD 7+,8-: Output 12V voltage externally. When the key switch is in the OFF position, the 12V power is immediately cut off.
Short 9,10: Factory short, can also be used as an external remote switch interface.

Parallel_A: Parallel communication port 1 (CAN interface).
Parallel_B: Parallel communication port 2 (CAN interface).
Meter-485: for energy meter communication.
Modbus: Modbus communication.
DRM: It is used to accept the external input signal(Digital input).
BMS: BMS port for battery communication.

10. Omrežje, rezervni izhod in generator

Spodnji priključni prostor vsebuje ločene sponke GRID (omrežje), LOAD (rezervni izhod) in GEN (generator/pametni izhod/AC coupling).

- GRID priključite na distribucijsko omrežje prek ustreznega odklopnika in zaščite.
- LOAD je rezervni izhod za izbrane porabnike.
- GEN se lahko nastavi kot vhod generatorja, pametni izhod ali AC coupling.
- Nevtralni in zaščitni vodnik morata biti vezana skladno z lokalnim sistemom ozemljitve.
- Ne združujte omrežnega in rezervnega izhoda brez ustrezne zasnove.
- Pri zahtevnih porabnikih preverite zagonske tokove.

Note: This wire gauge is suitable for operation at the rated power. If the power exceeds the rated value, the inverter's overload protection will be triggered in pure off-grid mode.

Please follow below steps to implement Grid, load and Gen port connection:

1. Power Off First:
• Before beginning any connections, ensure that the AC breaker or disconnector is turned off to guarantee safety during installation.
2. Prepare Cable Fixing Heads:
• Loosen the cable fixing heads located at the lower sections of the Grid, Load, and Gen ports.
• Carefully pierce the black sealing rubber at the end of each compression ring on the cable fixing heads.
3. Strip and Insert Cables:
• Strip approximately 10 mm of insulation from each cable.
• Feed the stripped cable through the corresponding cable fixing head.
• Loosen the terminal bolts and insert the cable fully into the terminal, matching the marked polarity (+/-).
• Tighten the terminal screws securely to ensure a safe and stable connection.

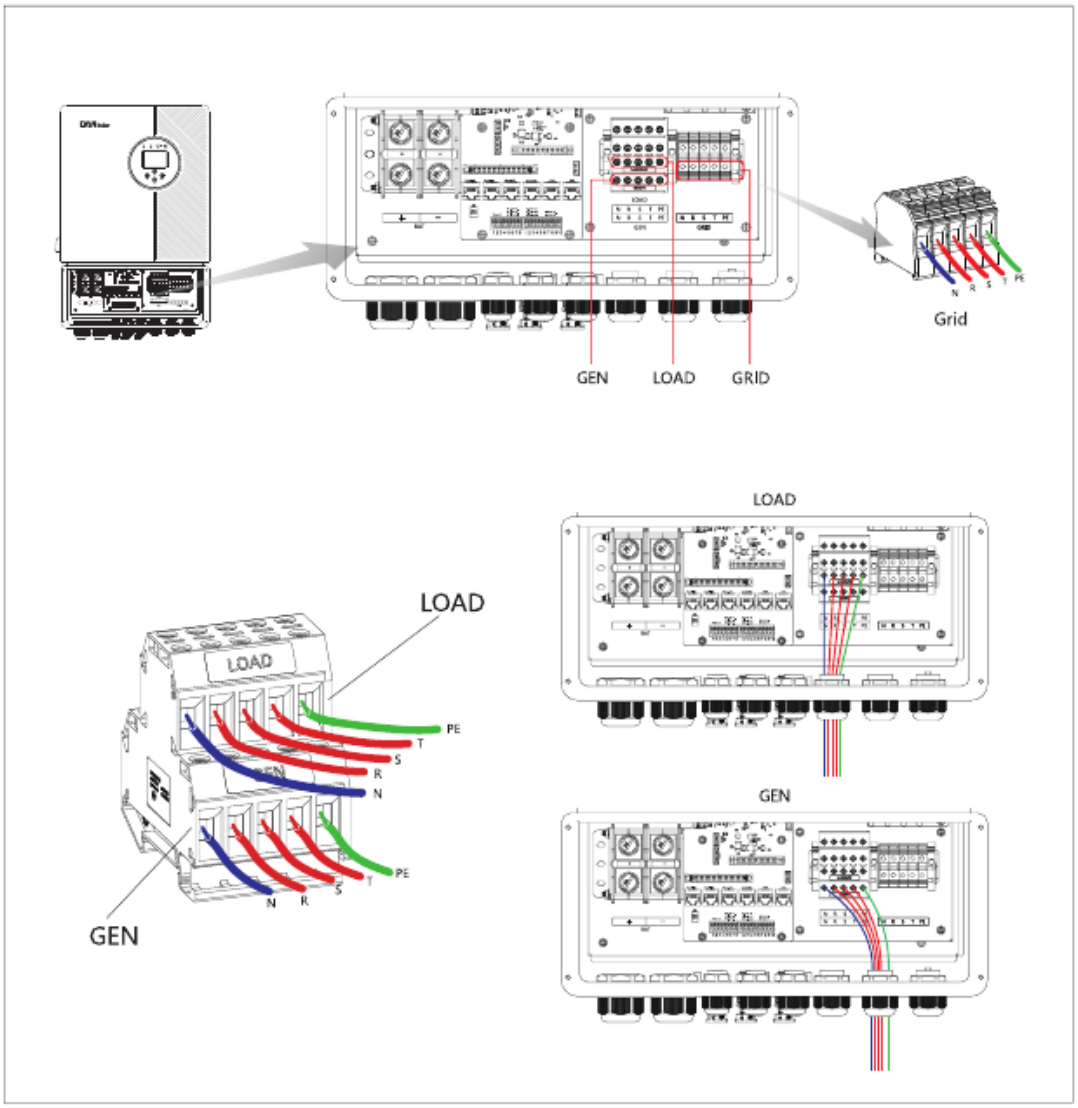

Razpored sponk GEN, LOAD in GRID.

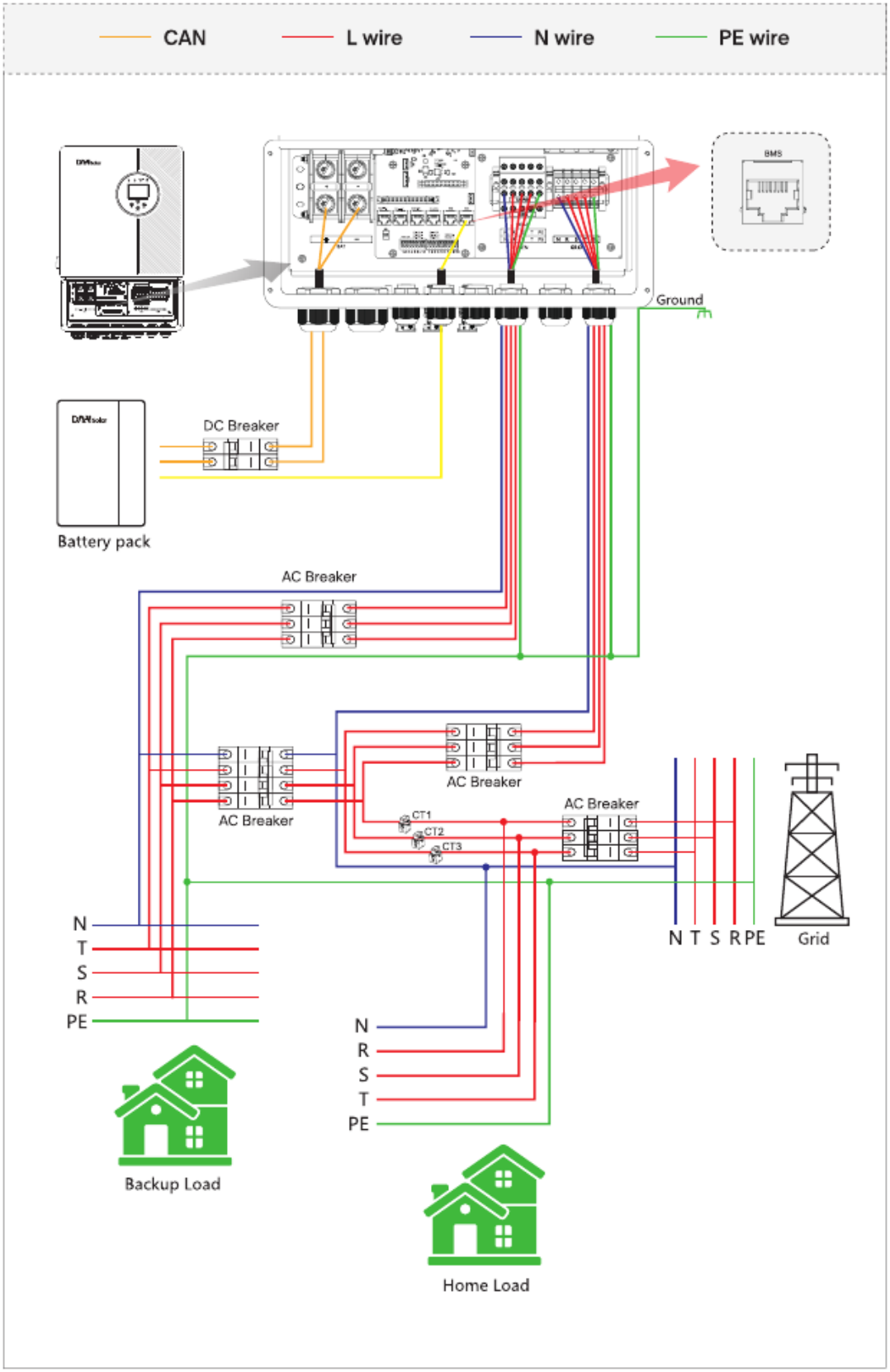
CAN
L wire
N wire
PE wire
BMS
Ground
DC Breaker
Battery pack
AC Breaker
AC Breaker
AC Breaker
AC Breaker
CT1
CT2
CT3
N T S R PE
Grid
N
T
S
R
PE
N
R
S
T
PE
Backup Load
Home Load

Tipična celotna povezava baterije, omrežja, rezervnega in glavnega bremena.

Typical Application Diagram of Diesel Generator:

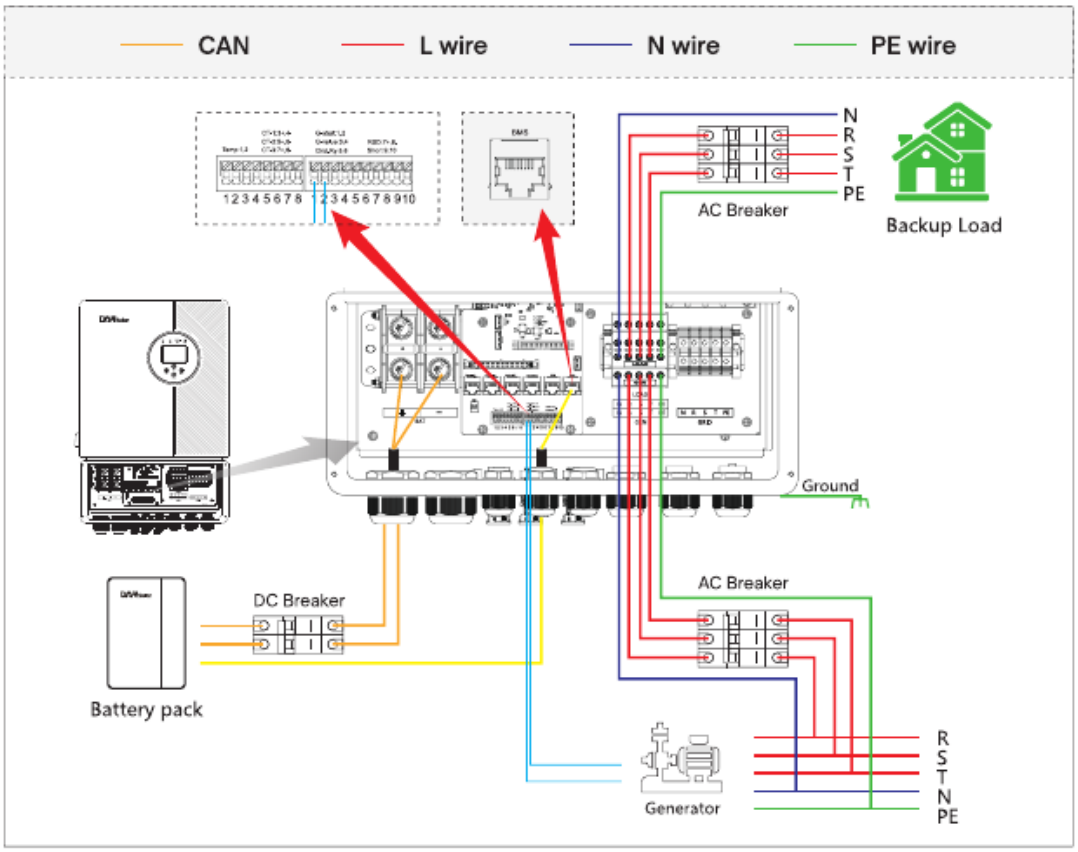

Typical Application Diagram of AC Coupling:

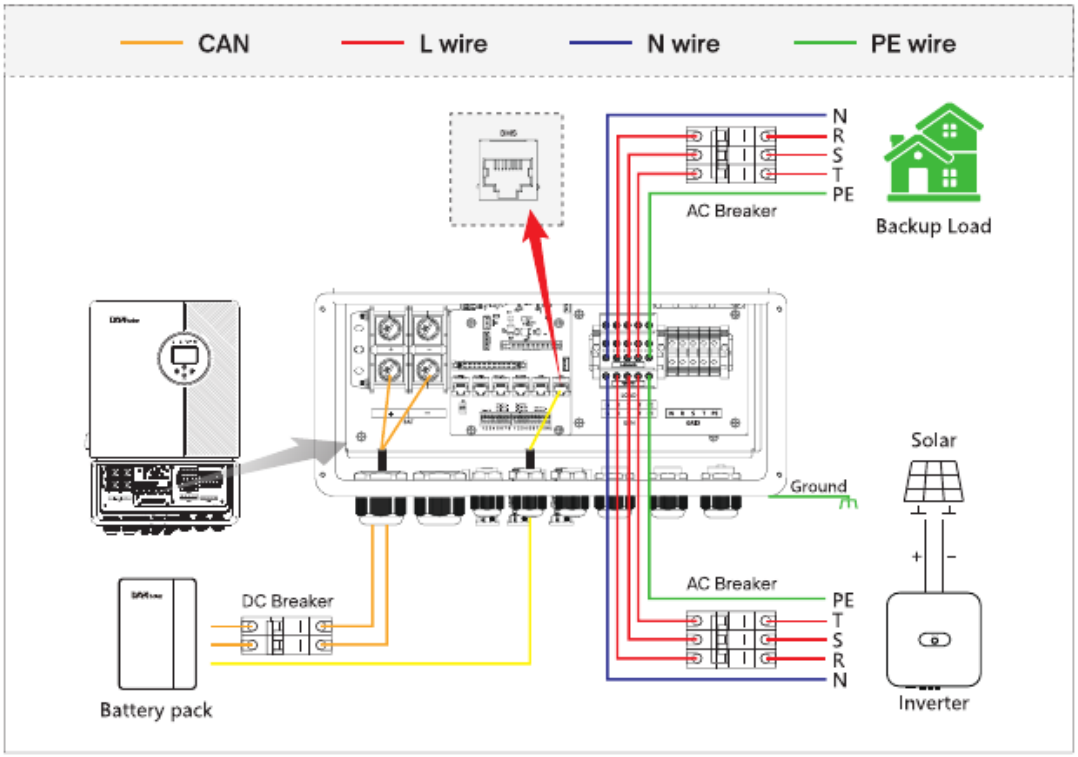

Primer uporabe generatorja in AC-coupling povezave.

11. CT-senzorji, merilnik in komunikacija

- Za merjenje pretoka energije so priloženi trije CT-senzorji, po eden na vsako fazo.
- Puščica na CT-senzorju mora biti usmerjena proti omrežju.
- Fazni vrstni red CT1/CT2/CT3 mora ustrezati L1/L2/L3.
- Nepravilna smer ali zamenjane faze povzročijo napačno regulacijo izvoza.
- Namesto CT je pri nekaterih konfiguracijah možen zunanji merilnik prek RS485.
- Podatkovni ključ LSW-5B3153 se vstavi v predvideni Wi-Fi komunikacijski priključek.
- Za lokalno integracijo so na voljo Modbus, RS485 in CAN; konkretne registre je treba pridobiti od proizvajalca.

3.5.6.4 Meter Connection

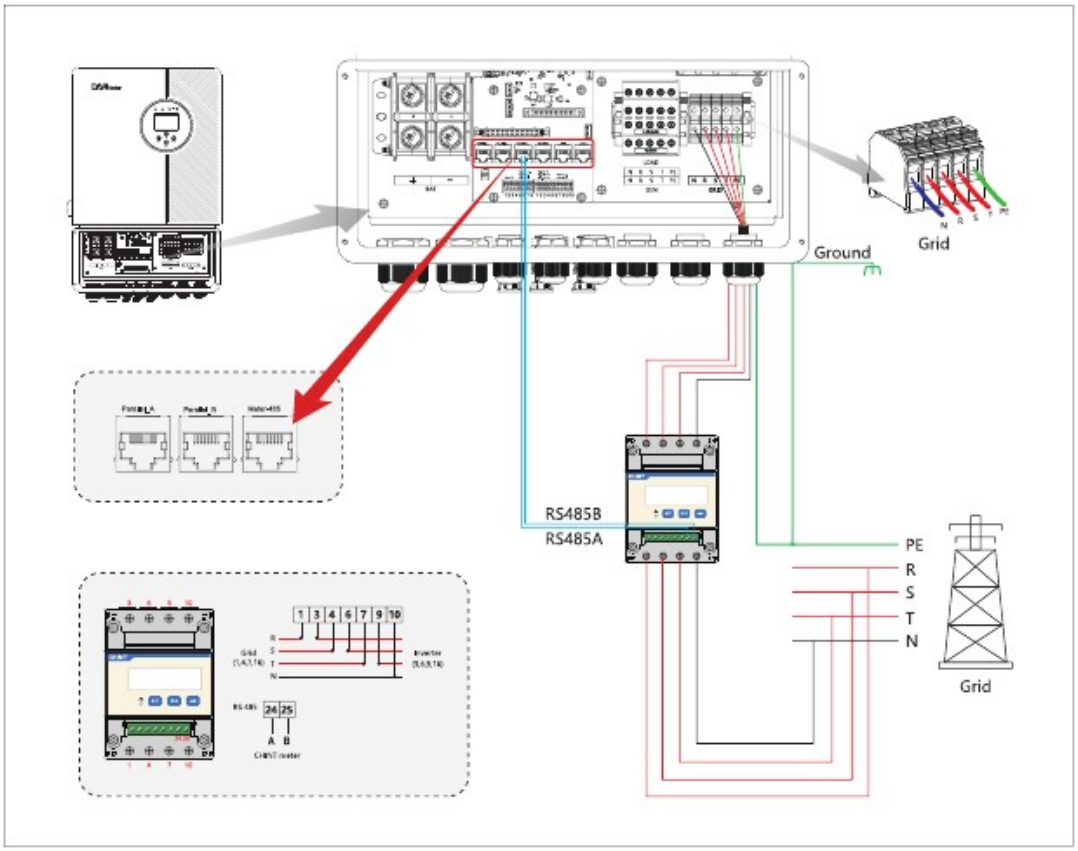

3.5.6.5 WIFI Connection

WIFI capture stick and inverter are fixed via USB, please refer to the following installation steps:
1. Insert the data acquisition stick along the connector guide slot.
2. Tighten the fastening cap clockwise.
Refer to the figure below.

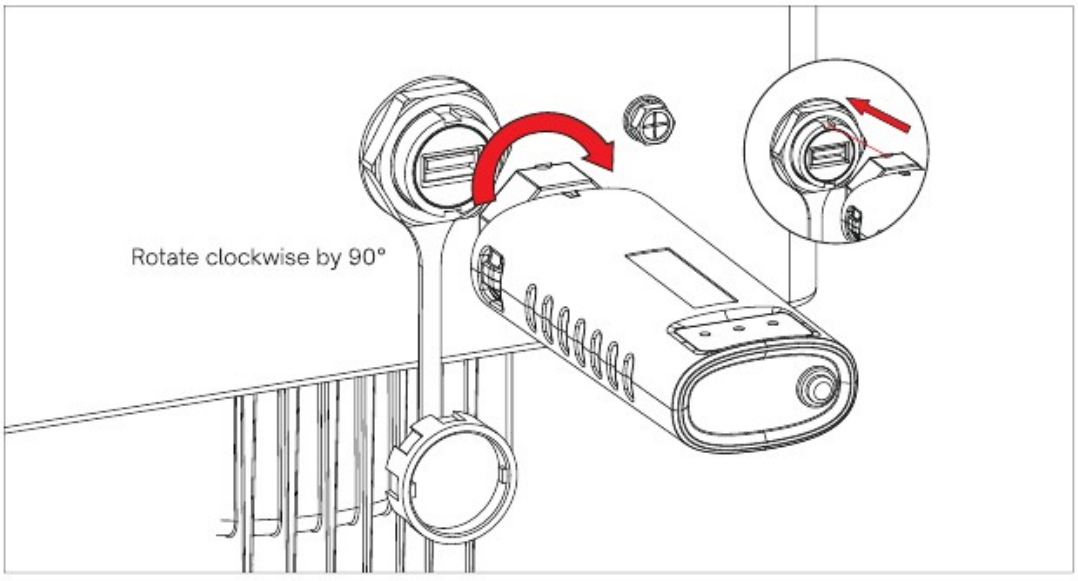

12. Zagon in zaustavitev

12.1 Priporočen vrstni red zagona

30. Preverite vse povezave, polariteto, ozemljitev in navore.
31. Vklopite baterijski odklopnik.
32. Vklopite stikalo oziroma gumb inverterja.
33. Vklopite PV-stikalo.
34. Vklopite omrežni AC-odklopnik.
35. Vklopite odklopnik rezervnega izhoda.
36. Na zaslonu preverite, ali so omrežje, PV, baterija in porabniki pravilno zaznani.

12.2 Priporočen vrstni red zaustavitve

37. Izklopite omrežni AC-odklopnik.
38. Izklopite odklopnik rezervnega izhoda.
39. Izklopite PV-stikalo.
40. Izklopite baterijski odklopnik.
41. Izklopite inverter.
42. Pred servisom počakajte najmanj 5 minut.

13. Zaslon in osnovna uporaba

LED	**Pomen**
DC - zelena	PV-povezava je normalna
AC - zelena	Omrežna povezava je normalna
Normal - zelena	Inverter deluje normalno
Alarm - rdeča	Prisotna je napaka ali opozorilo

Tipka	**Funkcija**
ESC	Nazaj na prejšnji zaslon
UP	Povečanje vrednosti ali premik navzgor
DOWN	Zmanjšanje vrednosti ali premik navzdol
ENTER	Potrditev in naslednja možnost

3.6 System Operation

3.6.1 Power On / Power Off

With the device properly installed and the battery securely connected, you can power on the system by pressing the ON/OFF button located on the left side of the chassis.
Note: When the input from any source—such as the PV, battery, generator, or grid—is within the allowable range, the LCD screen will light up and display the "OFF" state, even if the ON/OFF button has not been pressed. However, the system will only enter normal operation mode once the ON/OFF button is pressed.

3.6.2 Operation and Display Panel

The operation and display panel, shown in below chart, is on the front panel of the inverter.
It includes four function keys and a LCD display, indicating the operating status and input/ output power information.

Indicator light status

Indicator light status		Description
DC	Green LED stays on	PV connection normal
AC	Green LED stays on	Grid connection normal
Normal	Green LED stays on	Inverter operating normally
Alarm	Red LED stays on	Fault or Warning

Function Buttons

Function Buttons	Description
Esc	Back to last option
Up	Increase the input value and Table page break
Down	Decrease the input value and Table page break
Enter	Proceed to next selection

3.6.3 LCD Display

3.6.3.1 Main Screen

The LCD is touchscreen, below screen shows the overall information of the inverter.

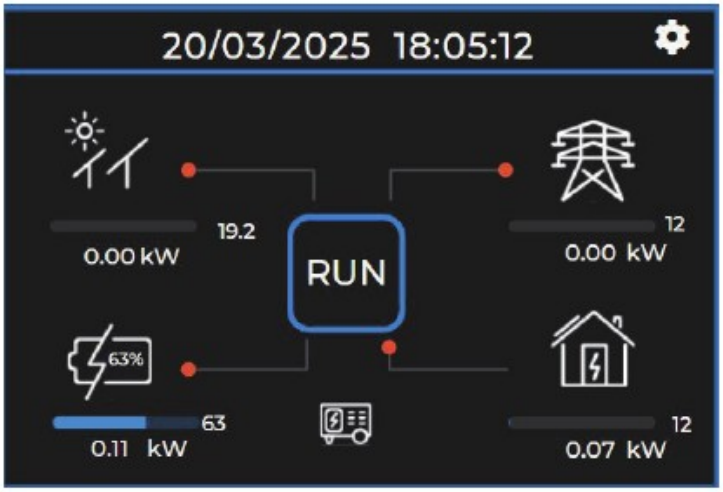

Glavni zaslon in stanje sistema.

Na glavnem zaslonu so prikazani pretoki med PV-poljem, baterijo, omrežjem in porabniki. Negativna moč baterije praviloma pomeni polnjenje, pozitivna pa praznjenje. S pritiskom na posamezno ikono odprete podrobne podatke in zgodovinske krivulje.

Battery Icon Operation Procedure

Click the battery icon on the main page to enter the battery data interface.

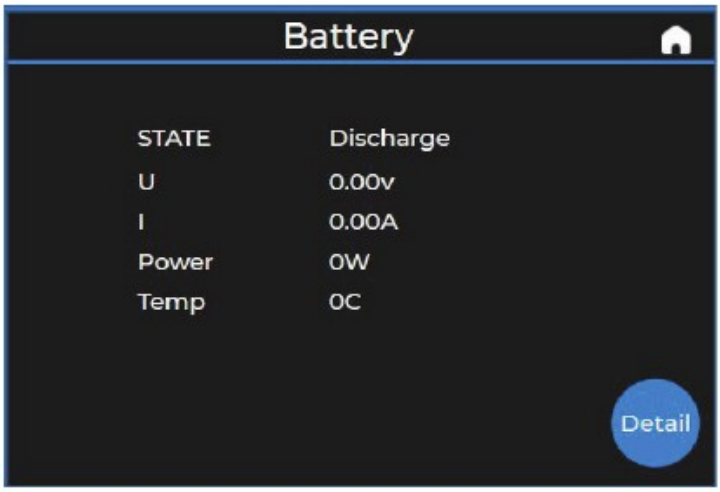

On the interface, you can view the following information:

Name	Instructions
State	The current status of the battery
U	The current voltage of the battery
I	The present current of the battery(Charge or Discharge)
Power	The current Power of the battery
Temp	The current temperature of the battery
SOC	The current remaining battery capacity

If you are using a lithium battery, Click the "detail" button will take you to the BMS page.

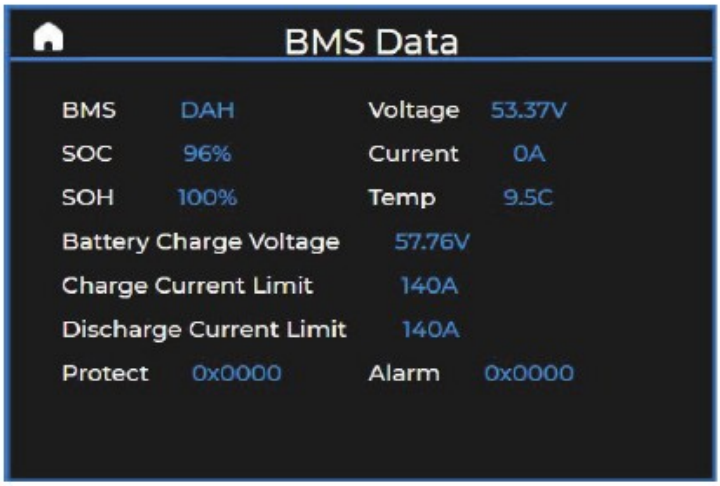

On the interface, you can view the following information:

14. Načini delovanja

Način	Opis
Selling First	Prednost ima oddaja presežkov v omrežje; glede na nastavitve lahko sodeluje tudi baterija.
Zero Export to CT	Inverter s CT-senzorji omejuje oddajo v omrežje na nastavljeno vrednost.
Zero Export to Load	Moč uravnava glede na interno merjeno breme na izhodu.
Solar Sell	Dovoli prodajo presežka PV-energije v omrežje.
Battery First	PV najprej polni baterijo, nato napaja porabnike; manjkajočo energijo zagotovi omrežje.
Load First	PV najprej napaja porabnike, nato polni baterijo; manjkajočo energijo zagotovi omrežje.
Grid Peak Shaving	Omeji največjo moč, ki jo sistem prevzema iz omrežja.
Time of Use	Omogoča več časovnih intervalov z različnimi cilji SOC in polnjenjem iz omrežja/generatorja.

C. Click the "System Operation Mode" button to enter the System Operation Mode interface.It is divided into three steps.

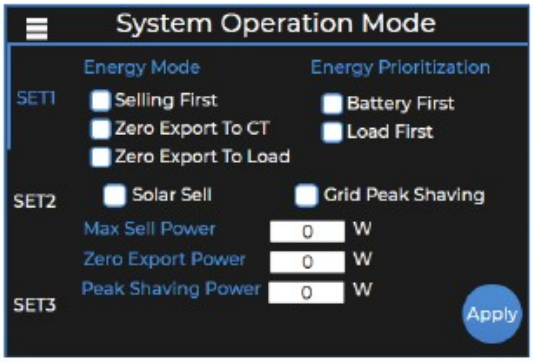

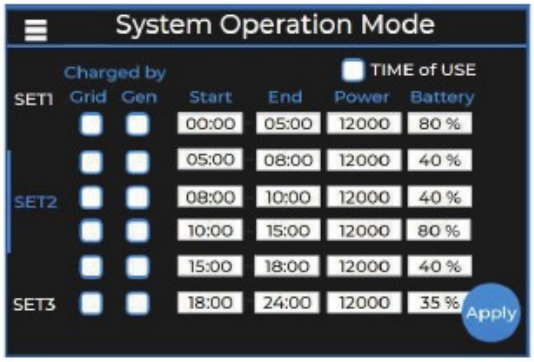

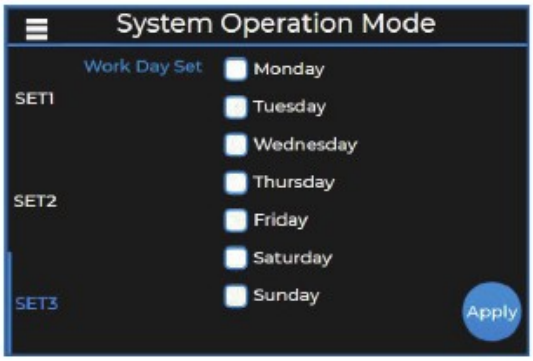

Setting Items			Instructions
SET1	Energy Mode	Selling First	This Mode allows hybrid inverter to sell back any excess power produced by the solar panels to the grid. If time of use is active, the battery energy also can be sold into grid.
		Zero Export To CT	Hybrid inverter will not only provide power to the backup load connected but also give power to the home load connected. If PV power and battery power is insufficient, it will take grid energy as supplement. The hybrid inverter will not sell power to grid. In this mode, a CT is needed. The installation method of the CT please refer to ***chapter 3.5.6.3 CT Connection***. The external CT will detect power flowing back to the grid and will reduce the power of the inverter only to supply the local load, charge battery and home load.Refer to Figure a below.
		Zero Export To Load	Hybrid inverter will only provide power to the backup load connected. The hybrid inverter will neither provide power to the home load nor sell power to grid. The built-in CT will detect power flowing back to the grid and will reduce the power of the inverter only to supply the local load and charge the battery.Refer to Figure b below.

Meniji za izbiro načina delovanja in časovnih intervalov.

Priporočilo: Za običajno samooskrbo je pogosto primeren način Load First ali ustrezno nastavljen Time of Use. Pred uporabo ničelnega izvoza preverite smer CT-senzorjev in fazni vrstni red.

15. Nastavitve generatorja in AC coupling

Možnost	Pomen
Generator Input	GEN priključek deluje kot vhod generatorja.
Fuel-driven AC Power	Največja dovoljena moč generatorja.
Smart Load Output	GEN priključek deluje kot krmiljen izhod za porabnik glede na SOC baterije.
AC Coupling Mode	GEN vhod sprejema AC iz obstoječega omrežnega PV-inverterja.
Connect Generator to Grid	Dovoli povezavo generatorja z omrežjem, kjer je to dovoljeno in pravilno projektirano.
Always-On Grid Load	Pametni izhod ostane aktiven ob prisotnem omrežju.
Export to Grid Off	Onemogoči izvoz v omrežje.

D. Click the "Generator Port Settings" button to enter the Generator Port Settings interface

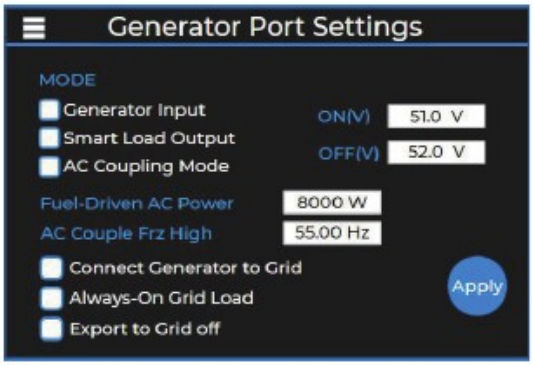

Select the Desired Modes by Checking the Appropriate Checkboxes:

Setting Items		Instructions
Mode	Generator Input	If the Gen input interface is selected to be used as an output terminal, this output terminal will supply power only when the battery charge level is higher than the user-set threshold.
	Fuel-Driven AC Power	Maximum allowed power from diesel generator.
	Smart Load Output	This mode utilizes the Gen input connection as an output which only receives power when the battery SOC is above a user programmable threshold. e.g. ON: 100%, OFF=95%: When the battery bank SOC reaches 100%, Smart Load Port will switch on automatically and power the load connected. When the battery bank SOC < 95% , the Smart Load Port will switch off automatically.
	AC Coupling Mode	Use the Gen input port as the input (AC coupling) for a micro-inverter or a grid-connected inverter.
	AC Couple Frz High	In AC Coupling mode,When the battery charge gradually reaches the set value (OFF), the microinverter's output power will decrease linearly during this process.Once the battery charge equals the set value (OFF), the system frequency will adjust to the preset value, at which point the microinverter(s) will cease operation.
	Connect Generator to Grid	Connect the diesel generator to the grid input port.
	Always-On Grid Load	When click "Always-On Grid Load" the smart load will switch on when the grid is present.
	Export to Grid Off	This feature is under development.

Click the "apply" button to save the settings and apply them to the inverter.

16. Nastavitve omrežja

Omrežne parametre sme nastavljati samo usposobljen monter skladno z zahtevami distribucijskega operaterja. Napačne nastavitve lahko povzročijo nevarno delovanje ali zavrnitev priključitve.

- Izberite ustrezen omrežni standard in nazivno napetost/frekvenco.
- Nastavite dovoljene meje napetosti in frekvence.
- Nastavite čase ponovnega priklopa po izpadu.
- Funkcije P(F), P(Q), V(W), V(Q) in ride-through uporabljajte le, če jih zahteva omrežni standard.
- Za slovenski trg preverite zahtevano skladnost in certifikate za konkretno različico firmware-a.

17. Nastavitve baterije

Nastavitev	**Pomen**
Battery Type	Lithium, Lead Acid ali No Battery
Energy Mode	Pri litijevi bateriji praviloma Use Capacity; pri svinčeni Use Voltage
Battery Capacity	Nazivna kapaciteta baterijskega sistema
Max Charge Current	Največji dovoljeni polnilni tok
Max Discharge Current	Največji dovoljeni praznilni tok
Activate Battery	Funkcija za oživitev globoko izpraznjene baterije, če jo baterija podpira
Lithium Protocol	Izbira BMS-protokola
Shutdown SOC	SOC, pri katerem inverter preneha prazniti baterijo
Low Battery SOC	Nizek prag SOC za opozorilo oziroma ukrep
Restart SOC	SOC za ponovno normalno delovanje
Gen/Grid Charge	Dovoljenje in tok polnjenja iz generatorja ali omrežja

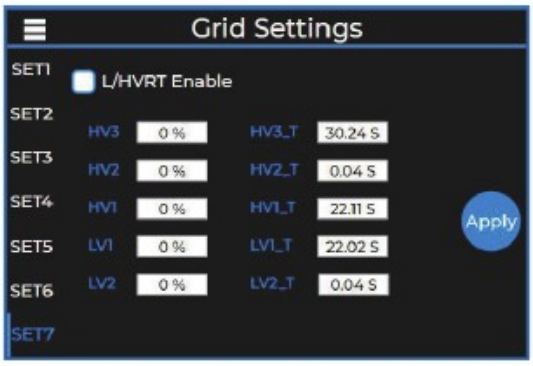

SET7: Set the high-voltage ride-through and low-voltage ride-through values of the grid voltage and their related time parameters. After selecting the corresponding grid standard in the Grid Settings step, the corresponding parameters will be automatically generated. It is not recommended to modify them casually.

F. Click the "Battery Settings" button to enter the Battery Settings interface.It is divided into three steps.

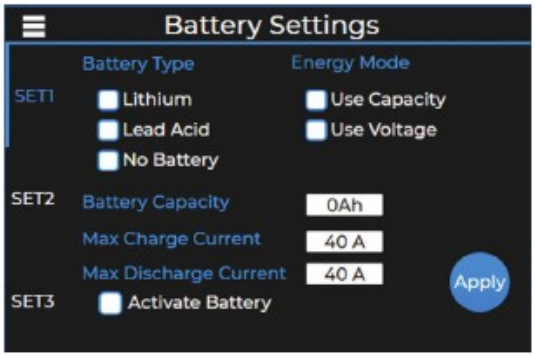

Setting Items		Instructions
SET1	Battery Type	Select the type of the connected battery.When the battery type is set to lithium battery, the State of Charge (SOC) percentage is used as the main display parameter. When the battery type is set to lead-acid battery, the real-time terminal voltage (V) is used as the main display parameter.
	Energy Mode	When lithium batteries are selected, the system automatically sets the energy mode to "Use Capacity". When lead-acid batteries are selected, the system automatically sets the energy mode to "Use Voltage".
	Battery Capacity	Set the rated capacity corresponding to the connected battery.
	Max Charge Current	Set the maximum charging current corresponding to the connected battery.
	Max Discharge Current	Set the maximum discharging current corresponding to the connected battery.
	Activate Battery	When turned on, the excessively discharged battery can be slowly charged through the solar array or the Grid to restore it.

Click the "apply" button to save the settings and apply them to the inverter.

Osnovne nastavitve vrste baterije, kapacitete in tokov.

Pomembno: Največji tok 240 A je zmogljivost inverterja. Nastavljena vrednost ne sme presegati omejitve baterije, BMS-a, varovalke in kablov.

18. Vzporedna vezava

Proizvajalec predvideva vzporedno delovanje do 10 enot. Vzporedna vezava zahteva usklajene modele, komunikacijske povezave, pravilno določitev glavne in podrejenih enot ter projektiranje skupnih AC- in DC-zbiralk.

- Nastavite eno enoto kot MASTER, ostale kot SLAVE.
- Vsaka enota mora imeti ustrezno lastno zaščito.
- Komunikacijski naslovi morajo biti enolični.
- Fazni vrstni red in dolžine vodnikov morajo biti usklajeni.
- Vzporedne vezave ne izvajajte brez proizvajalčevih dodatnih navodil in izkušenega projektanta.

Three phase parallel connection diagram:

It can support a maximum of 10 units to operate in parallel (both grid-connected and off-grid modes are available).

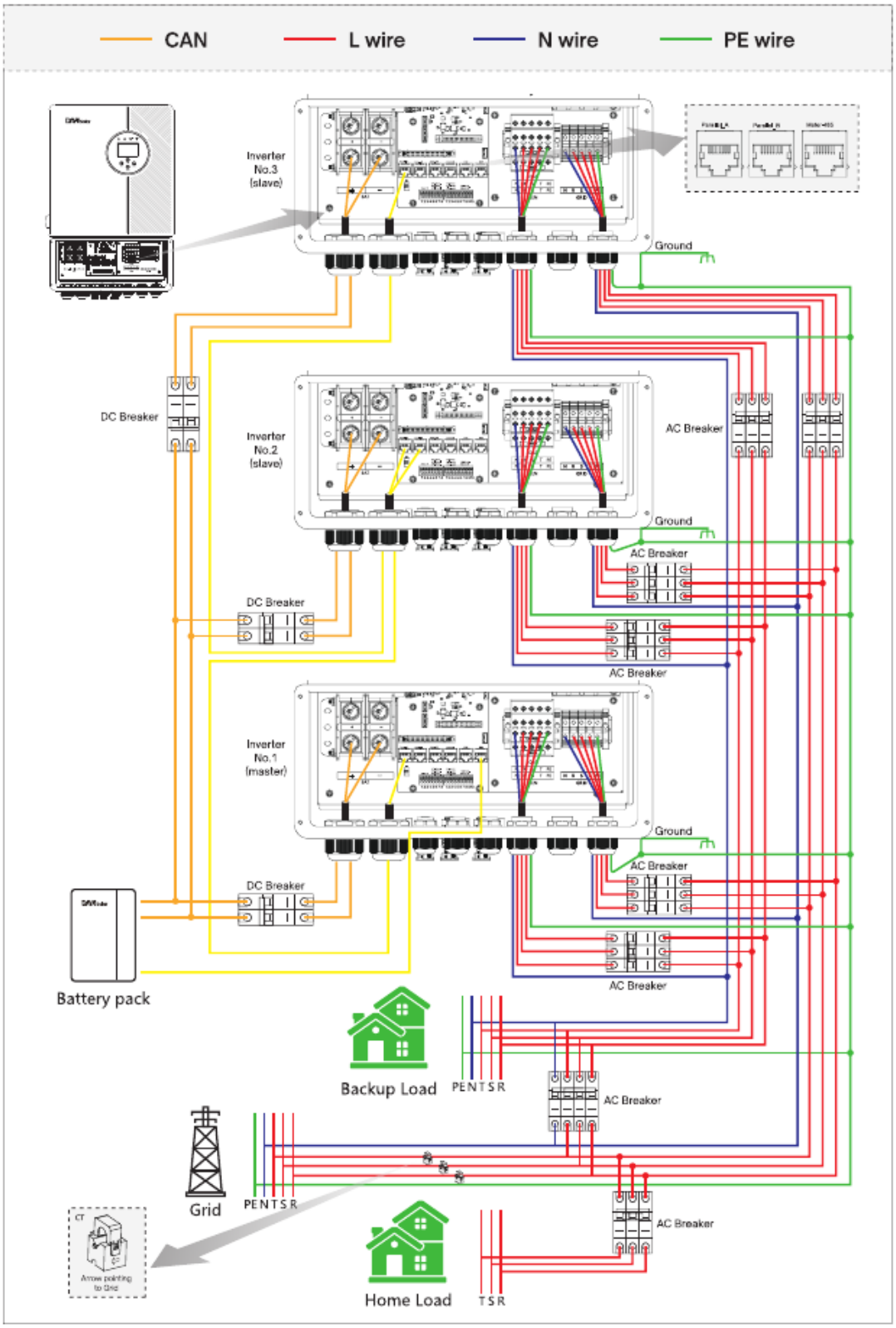

Primer trifazne vzporedne povezave več inverterjev.

19. Odpravljanje napak

Koda	Opis	Prvi ukrepi
E007	Previsoka omrežna frekvenca	Preverite frekvenco omrežja in nastavljeni standard; počakajte na stabilizacijo.
E008	Prenizka omrežna frekvenca	Preverite omrežje, priključek in nastavitve frekvence.
E012	Napaka zaporedja faz	Preverite fazni vrstni red L1/L2/L3.
E019	Obrnjena PV-polariteta	Takoj izklopite PV in preverite polariteto.
E023	Prenizka napetost DC-vodila	Izklopite sistem, počakajte 5 minut in preverite PV/baterijo.
E030	Previsok tok povečave	Izklopite sistem, preverite povezave in obremenitev.
E031	Previsok tok omrežja	Preverite omrežje, breme in AC-povezave.
E032	Previsoka napetost omrežja	Preverite omrežno napetost in nastavitve.
E038	Previsok tok inverterja	Preverite rezervno breme in morebitni kratek stik.
E055	PV-izolacija ali PV-napetostna napaka	Preverite izolacijo, PE in PV-stringe.
E056	PV-izolacija ali PV-napetostna napaka	Preverite PE, konektorje in izolacijsko upornost.
E058-E061	Uhajavi tok	Preverite PV-izolacijo, ozemljitev, vlago in kable.
E062	Napaka senzorja uhajavega toka	Izklopite AC in DC, počakajte in ponovno zaženite.
E067	Napaka komunikacije merilnika	Preverite RS485, naslov, polariteto A/B in vrsto merilnika.
E075	Baterija ni povezana	Preverite napetost, odklopnik, kabel in BMS-komunikacijo.
E162	Napaka BMS-komunikacije	Preverite kabel, protokol, CAN/RS485 pinout in podprtost baterije.
E169	Napaka zaznave obloka AFCI	Preverite PV-konektorje in kable; napako lahko ponastavi samo usposobljena oseba.

Servis: Če se napaka po varni zaustavitvi in ponovnem zagonu ponovi, zapišite kodo napake, serijsko številko, različico firmware-a in fotografirajte zaslon. Ne izvajajte posegov v notranjost naprave.

20. Vzdrževanje

- Redno preverjajte, da hladilne poti niso zamašene s prahom ali tujki.
- Preglejte ohišje, tesnila, kable, uvodnice in konektorje.
- Preverite znake pregrevanja, razbarvanja, korozije ali vlage.
- Preverite trdnost priključkov samo v popolnoma breznapetostnem stanju.
- Preverite delovanje ventilatorjev in nenavadne zvoke.
- Čiščenje izvajajte s suho ali rahlo vlažno krpo; ne uporabljajte topil ali visokotlačnega čiščenja.
- Pri zamenjavi ventilatorja mora biti sistem popolnoma izključen; servis naj izvede usposobljena oseba.
- Vse posege in napake beležite zaradi garancije.

21. Dodatek: priključki RJ45

Priključek	Pin	Signal

METER-485	1	METER-485-Bin
METER-485	2	METER-485-A
METER-485	3	COM-GND
METER-485	4	METER-485-A
METER-485	5	METER-485-B
METER-485	6	COM-GND
METER-485	7	METER-485-B
METER-485	8	METER-485-B
MODBUS	1	SUNSPE-485-A
MODBUS	2	SUNSPE-485-A
MODBUS	3	GND_SUNSPE-485
MODBUS	6	GND_SUNSPE-485
MODBUS	7	SUNSPE-485-B
MODBUS	8	SUNSPE-485-B
BMS 485/CAN	1	485_B
BMS 485/CAN	2	485_A
BMS 485/CAN	3	GND-485
BMS 485/CAN	4	CAN-H
BMS 485/CAN	5	CAN-L
BMS 485/CAN	6	GND-485
BMS 485/CAN	7	485_A
BMS 485/CAN	8	485_B

7 - APPENDIX

Appendix 1 - Definition of RJ45 Port Pin for 485

No.	Meter-485 Pin	METER-485 Port
1	METER-485-A	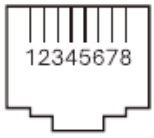
2	METER-485-A	
3	COM-GND	
4	METER-485-A	
5	METER-485-B	
6	COM-GND	
7	METER-485-B	
8	METER-485-B	

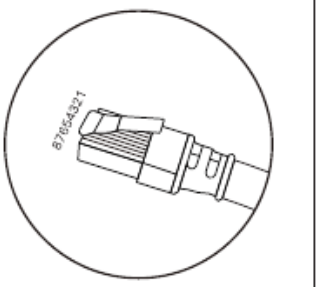

Appendix 2 - Definition of RJ45 Port Pin for "Modbus port" for remotely monitoring

No.	Modbus Port	Modbus Port
1	SUNSPE-485_A	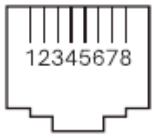
2	SUNSPE-485_A	
3	GND_SUNSPE-485	
4	/	
5	/	
6	GND_SUNSPE-485	
7	SUNSPE-485_B	
8	SUNSPE-485_B	

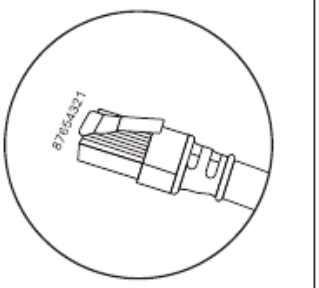

Appendix 3 - Definition of RJ45 Port Pin for BMS

No.	RS485 Pin	BMS 485/CAN Port
1	485_B	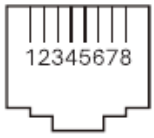
2	485_A	
3	GND-485	
4	CAN-H	
5	CAN-L	
6	GND-485	
7	485_A	
8	485_B	

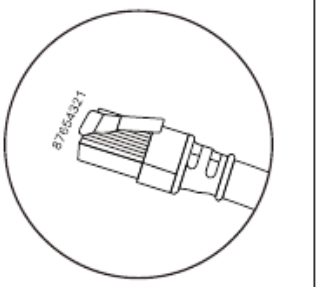

Originalni prikaz razporeda pinov za METER, Modbus in BMS.

22. Podpora in odgovornost

Pred prvo namestitvijo preverite, ali so na voljo veljavna EU-izjava o skladnosti, omrežni certifikati, seznam podprtih baterij in najnovejši firmware. Ta slovenska navodila so namenjena pomoči uporabniku in niso uradno potrjen prevod proizvajalca.

Kontakt	Podatek
Prodajalec	Herkules.si
E-pošta	info@herkules.si
Telefon	+386 40 281 966
Model	DHN-LVEH3P12K-EU-G1
Proizvajalec	DAH Solar Co., Ltd.
Originalni priročnik	DHN-LVEH3P8/10/12K-EU-G1, različica 20250902

Konec dokumenta